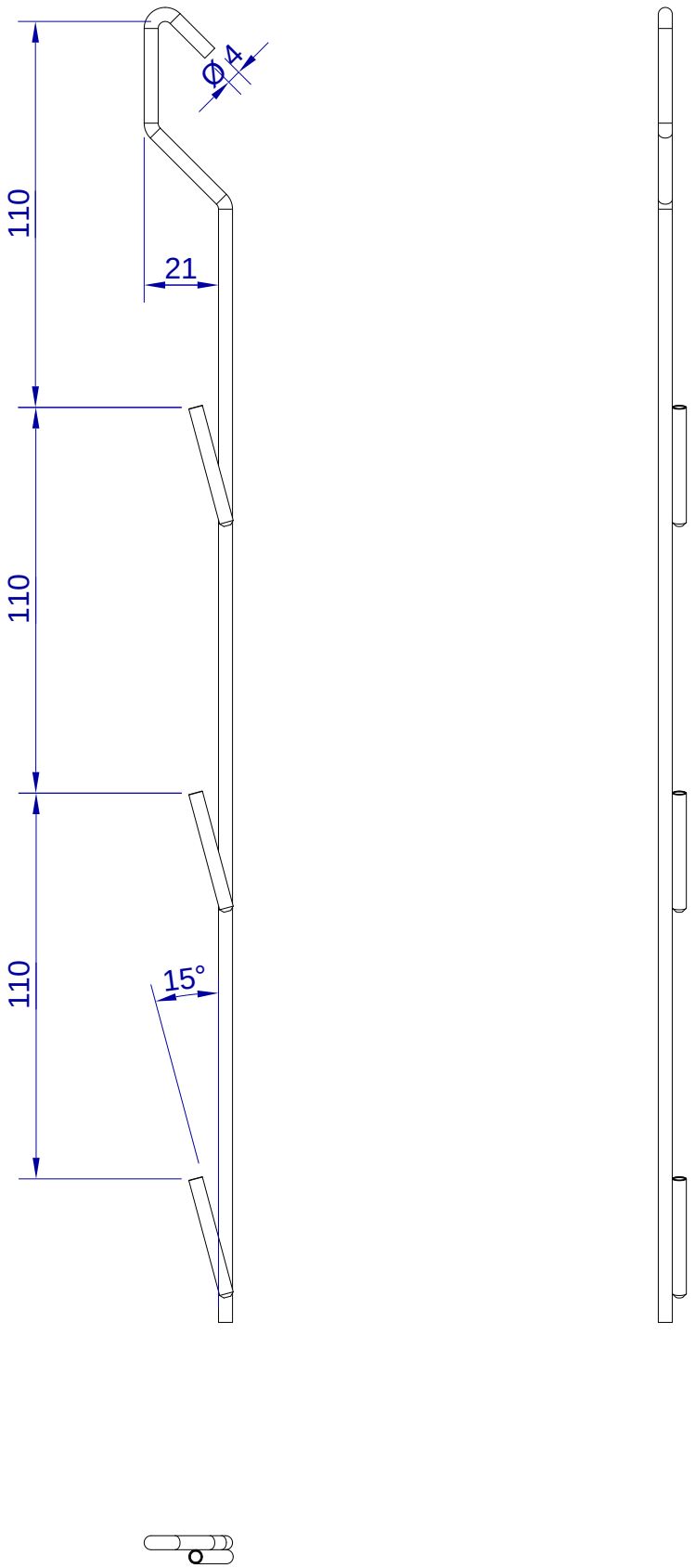


| | | |
|---|---|---|
| hang On | Product no.<br>PPHP 3 | Weight.<br>0,05 Kg |
| | Description<br>Socket jig for 3 test sheets | |

This drawing is HangOn AB property. It can't be reproduced or communicated without our written agreement

2026-01-07 12:34