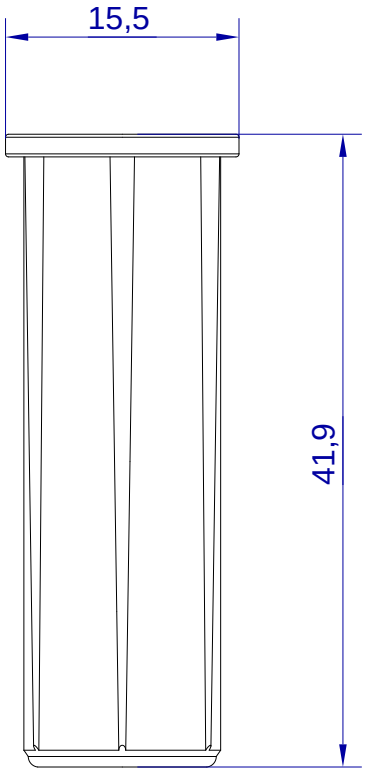

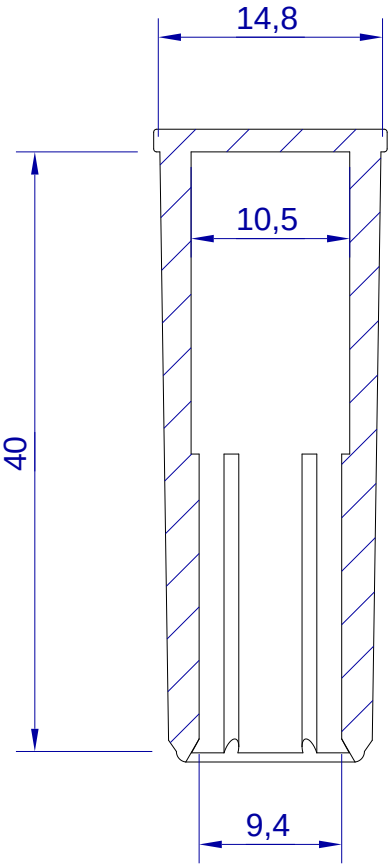

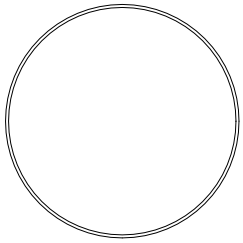

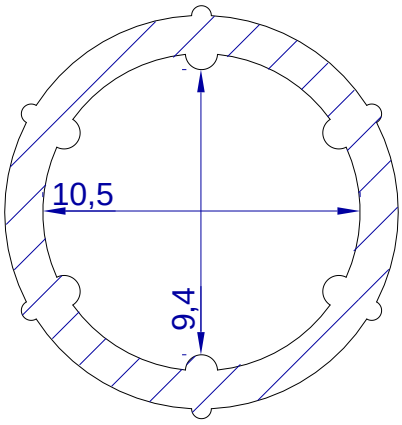

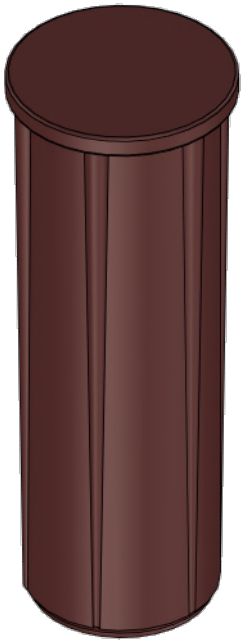

This drawing is HangOn AB property. It can't be reproduced or communicated without our written agreement

hang On

Product no.
GAQ M10X40

Description
HangOn Quick Cap M10x40 Rusty

2025-09-16 09:56